GENERAL NOTES:
1. MATERIAL: **STAINLESS STEEL, 316**
2. SPECIAL FINISH: **PASSIVATE AND ELECTROPOLISH**
3. SURFACE ROUGHNESS (UNLESS SPECIFIED OTHERWISE): **N/A** (AVERAGE MICRO-INCHES)
4. INTERPRET DIMENSIONS AND TOLERANCES PER ASME Y14.5M-1994
5. DEBURR AND BREAK ALL SHARP EDGES, MAX 0.010" (UNLESS SPECIFIED OTHERWISE)
6. PARTS ARE TO BE CLEAN AND FREE OF OIL, GREASE, AND OTHER CONTAMINANTS
7. DIMENSIONS INCLUDE ANODIZING, ELECTROPLATING, AND CHEMICALLY APPLIED FINISHES IF APPLICABLE

WELDMENT NOTES:
1. JOINTS WILL NOT ENDURE SIGNIFICANT STRESS DURING USE. WELD DESIGNATION IS LEFT TO THE DISCRETION OF THE WELDER
2. ALL EXTERNAL CORNERS SHOULD BE WELDED AND GROUND

REVISION HISTORY				
ZONE	REV	DESCRIPTION	DATE	APPROVED
	-	READY FOR FABRICATION	9/11/2020	HHMI\\talbotj
	A	HOLDER LENGTHENED. READY FOR FABRICATION	11/16/2020	HHMI\\talbotj
	B	ADD MACHINING AND ELECTROPOLISH DETAILS	1/6/2026	Arnold, Jon
	C	UPDATE FLAP HOLDER WIDTH AND HOLE SIZE	3/2/2026	Arnold, Jon

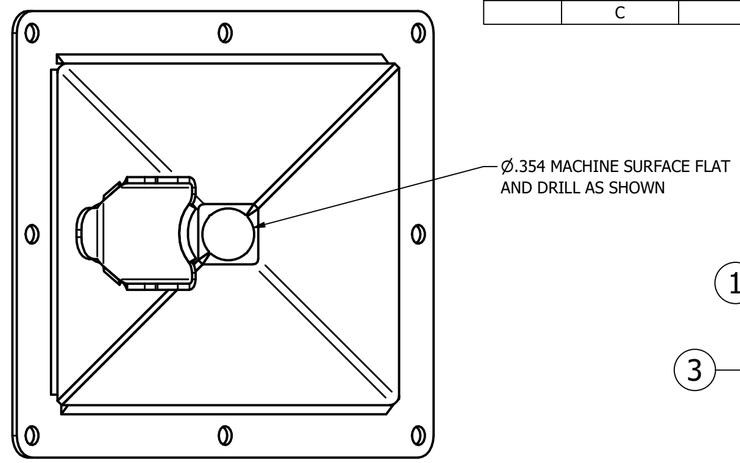

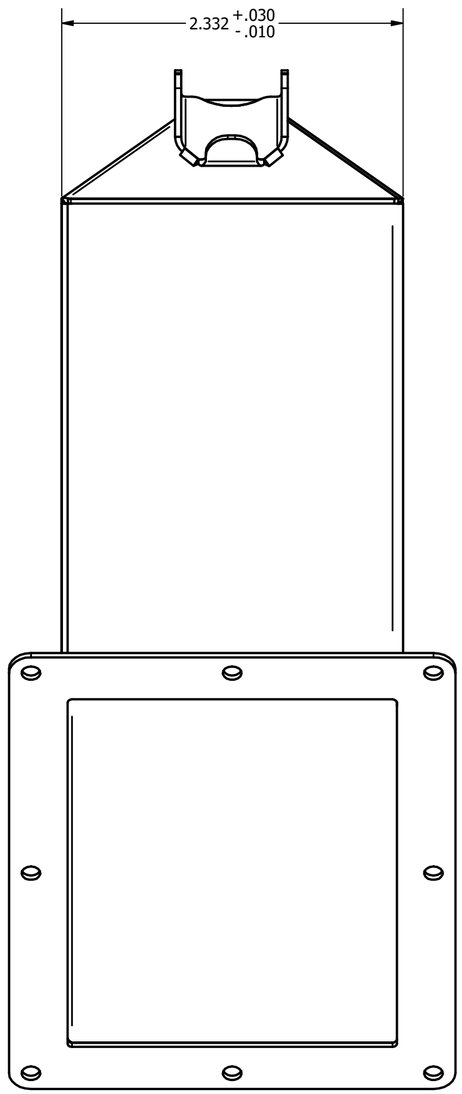

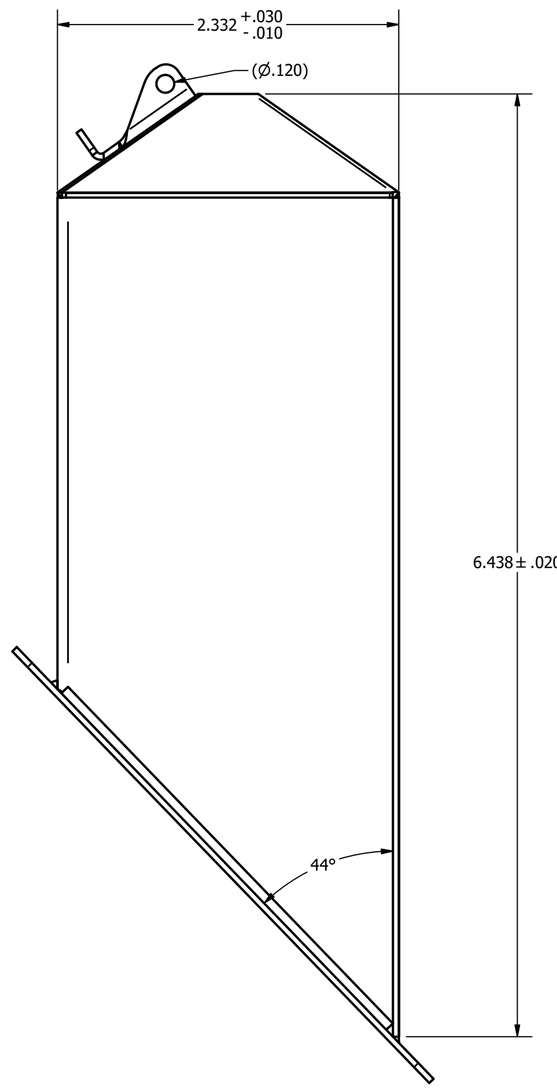

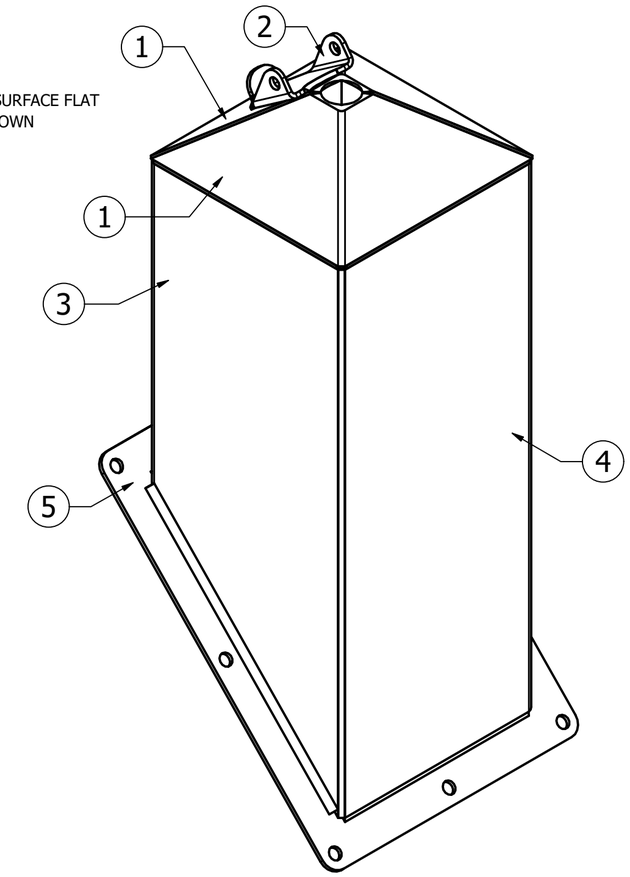

ITEM	QTY	FILE NAME	PART NUMBER
1	2	RCBH4 CONE.ipt	J008639
2	1	RCBH4 FLAP HOLDER.ipt	J008640
3	1	RCBH4 WALLS A.ipt	J008642
4	1	RCBH4 WALLS B.ipt	J008641
5	1	RCBH4 MOUNT PLATE.ipt	J008643

PARTS LIST

NOTICE:
INFORMATION CONTAINED IN THIS DOCUMENT OR ANY REPRODUCTION THEREOF, IS PROPRIETARY INFORMATION AND PROPERTY OF HOWARD HUGHES MEDICAL INSTITUTE. IT SHALL NOT BE DISCLOSED, COPIED, DUPLICATED OR USED FOR MANUFACTURE, PRODUCTION OR PROCUREMENT, WITHOUT THE EXPRESS WRITTEN PERMISSION OF HOWARD HUGHES MEDICAL INSTITUTE.

(UNLESS SPECIFIED OTHERWISE)
PRIMARY UNITS: INCHES
[SECONDARY UNITS]: MILLIMETERS

PRIMARY TOLERANCES:	
X.X	± 0.020
X.XX	± 0.010
X.XXX	± 0.005
X.XXXX	± 0.0005
ANGULAR	± 0.5 DEG

- DO NOT SCALE DRAWING -
THIRD ANGLE PROJECTION:

hhmi Howard Hughes Medical Institute
hhmi janelia Research Campus

RCBH4 WELDMENT.iam

SIZE	PART NUMBER	REV	SHEET
C	J008644	C	1 OF 10

WELDMENT NOTES:
1. SEAM WELD ALL INDICATED JOINTS AND INTERSECTIONS OF THOSE JOINTS
2. NO GRINDING IS NEEDED FOR ANY OF THE WELDS SHOWN ON THIS DRAWING

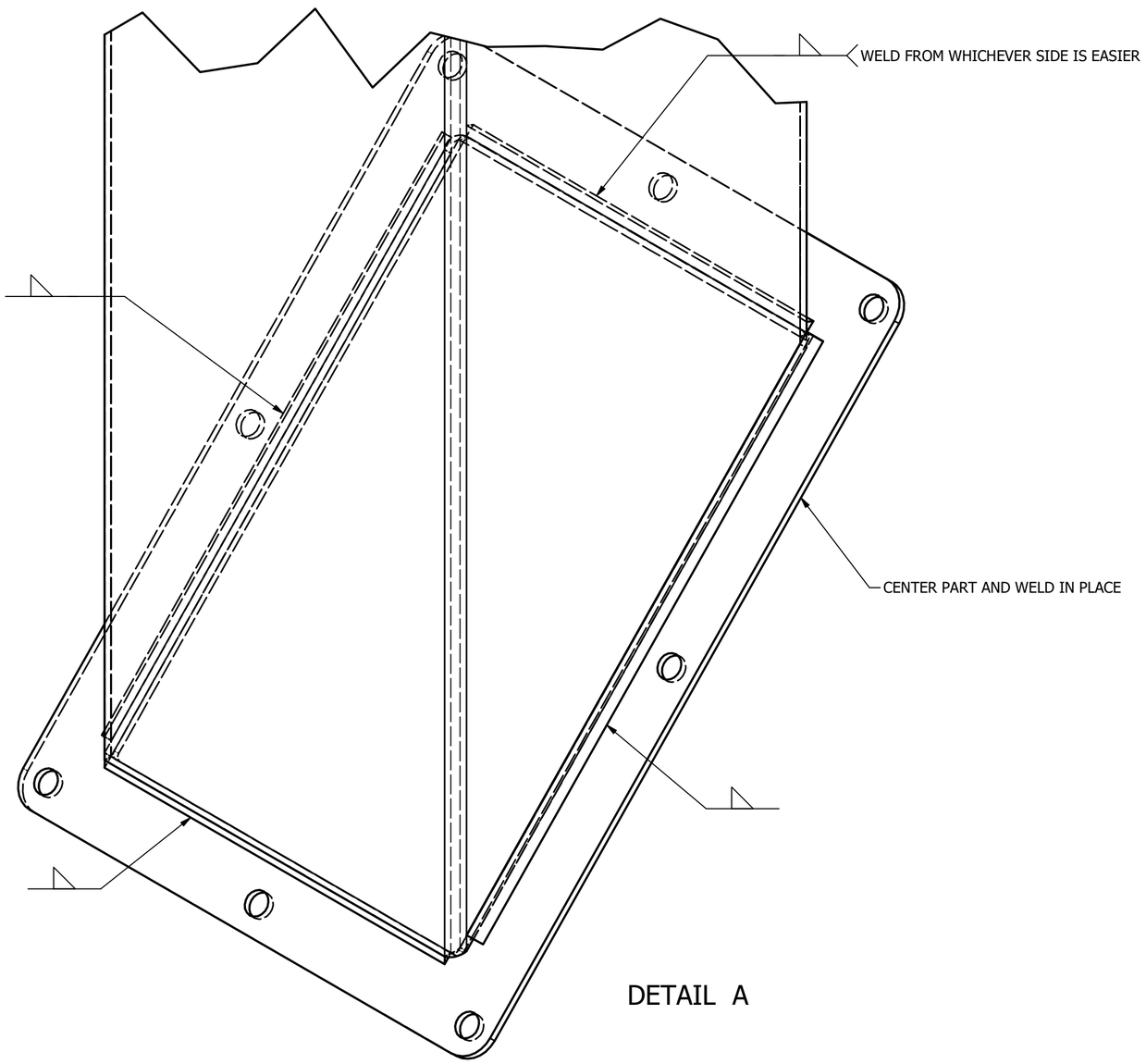

DETAIL A

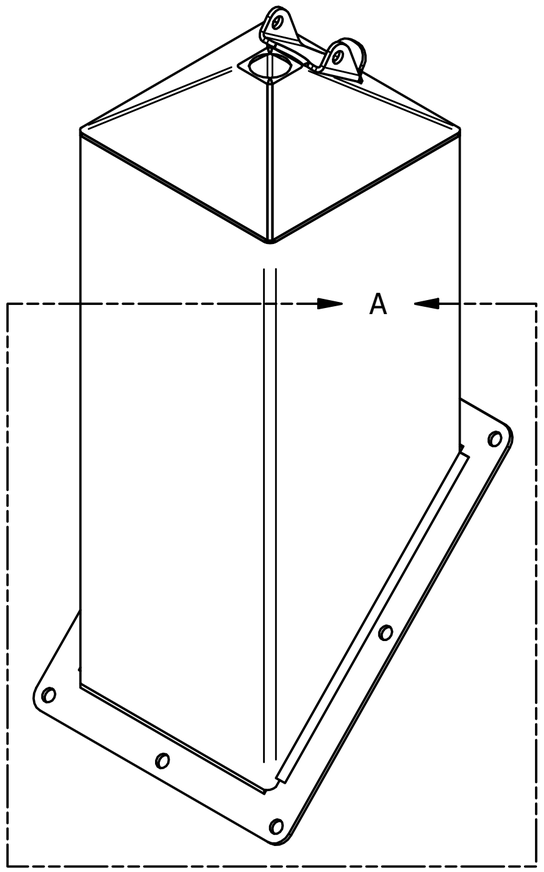

NOTICE:
INFORMATION CONTAINED IN THIS DOCUMENT OR ANY REPRODUCTION THEREOF, IS PROPRIETARY INFORMATION AND PROPERTY OF HOWARD HUGHES MEDICAL INSTITUTE. IT SHALL NOT BE DISCLOSED, COPIED, DUPLICATED OR USED FOR MANUFACTURE, PRODUCTION OR PROCUREMENT, WITHOUT THE EXPRESS WRITTEN PERMISSION OF HOWARD HUGHES MEDICAL INSTITUTE.

(UNLESS SPECIFIED OTHERWISE)
PRIMARY UNITS: INCHES
[SECONDARY UNITS]: MILLIMETERS

PRIMARY TOLERANCES:	
X.X	± 0.020
X.XX	± 0.010
X.XXX	± 0.005
X.XXXX	± 0.0005
ANGULAR	± 0.5 DEG

- DO NOT SCALE DRAWING -

THIRD ANGLE PROJECTION:

hhmi Howard Hughes Medical Institute

hhmi janelia Research Campus

RCBH4 WELDMENT.iam

SIZE	PART NUMBER	REV	SHEET
C	J008644	C	2 OF 10

WELDMENT NOTES:
1. SEAM WELD ALL INDICATED JOINTS AND INTERSECTIONS OF THOSE JOINTS WITH OTHER WELD
2. JOINTS WILL NOT ENDURE SIGNIFICANT STRESS DURING USE. WELD DESIGNATION IS LEFT TO THE DISCRETION OF THE WELDER
3. GRIND SMOOTH ALL INDICATED WELDS

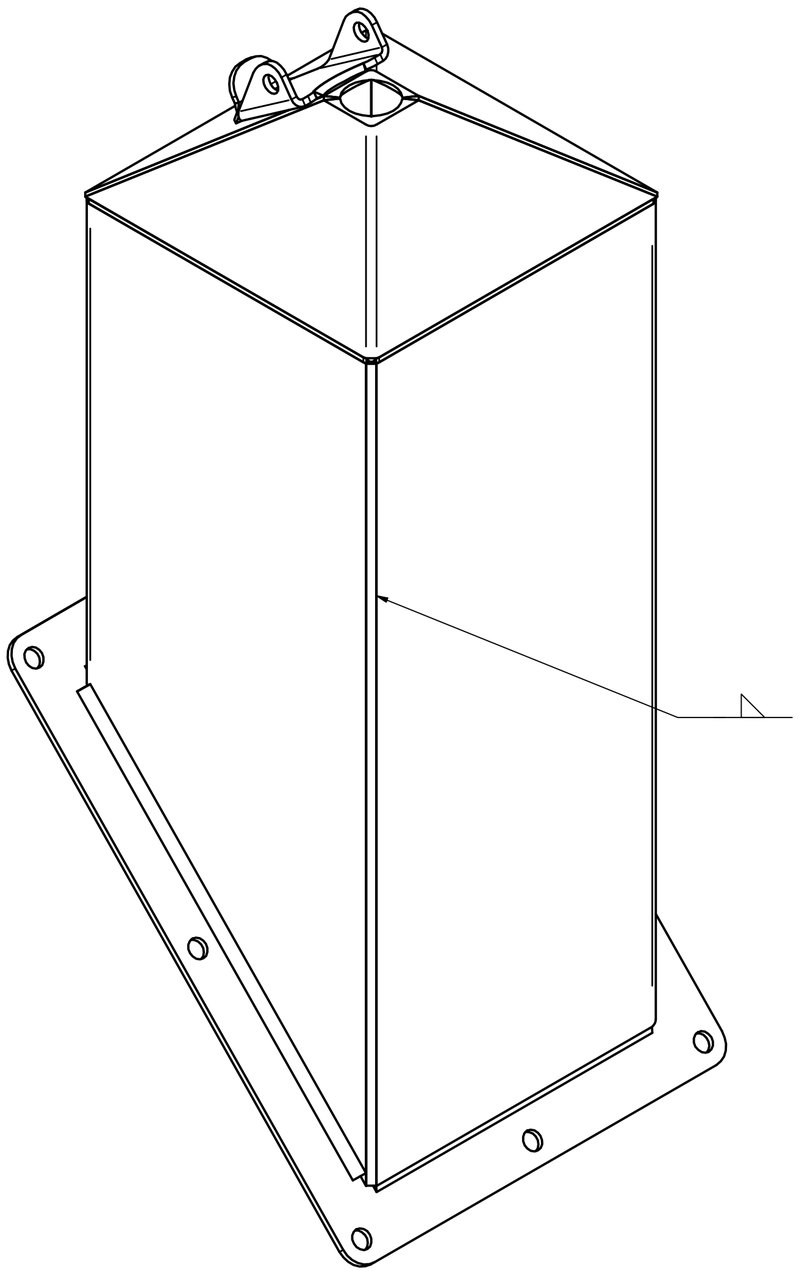

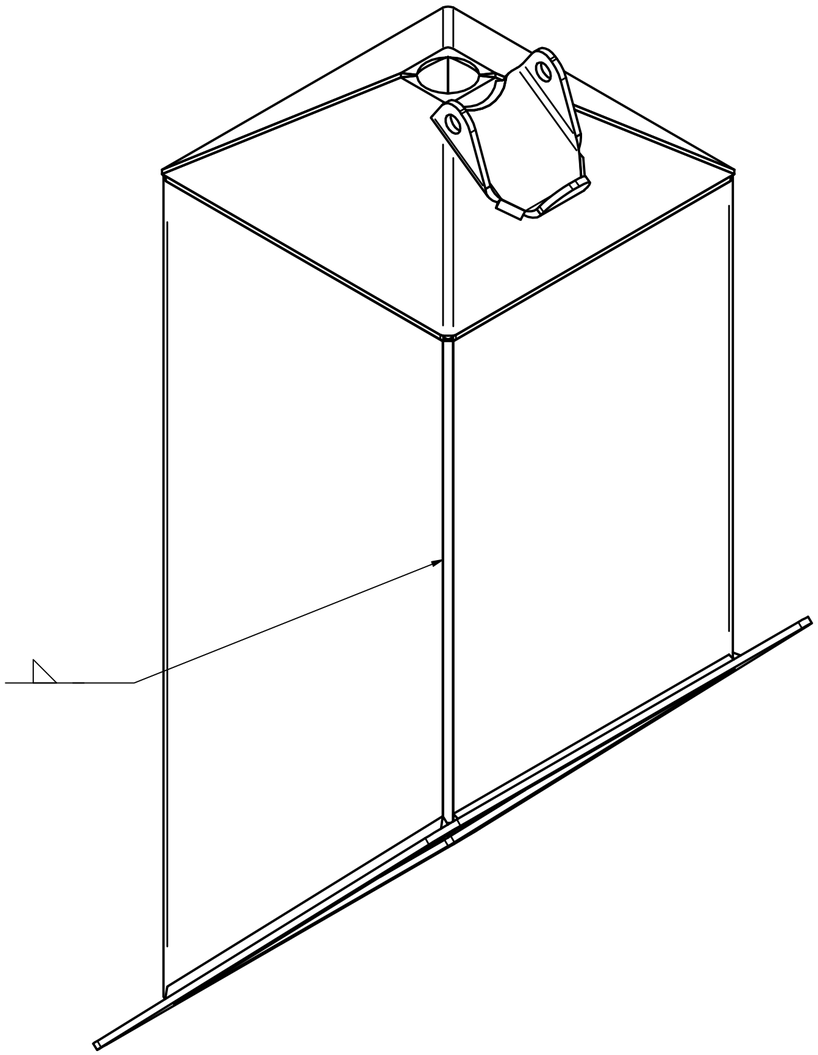

NOTICE:
INFORMATION CONTAINED IN THIS DOCUMENT OR ANY REPRODUCTION THEREOF, IS PROPRIETARY INFORMATION AND PROPERTY OF HOWARD HUGHES MEDICAL INSTITUTE. IT SHALL NOT BE DISCLOSED, COPIED, DUPLICATED OR USED FOR MANUFACTURE, PRODUCTION OR PROCUREMENT, WITHOUT THE EXPRESS WRITTEN PERMISSION OF HOWARD HUGHES MEDICAL INSTITUTE.

(UNLESS SPECIFIED OTHERWISE)
PRIMARY UNITS: INCHES
[SECONDARY UNITS]: MILLIMETERS

PRIMARY TOLERANCES:	
X.X	± 0.020
X.XX	± 0.010
X.XXX	± 0.005
X.XXXX	± 0.0005
ANGULAR	± 0.5 DEG

- DO NOT SCALE DRAWING -

THIRD ANGLE PROJECTION:

hhmi Howard Hughes Medical Institute

hhmi janelia Research Campus

RCBH4 WELDMENT.iam

SIZE	PART NUMBER	REV	SHEET
C	J008644	C	3 OF 10

WELDMENT NOTES:
1. WELD JOINTS AS DESIGNATED AND WELD ALL CORNERS AT THE INTERSECTIONS OF THOSE JOINTS
2. JOINTS WILL NOT ENDURE SIGNIFICANT STRESS DURING USE. WELD DESIGNATION IS LEFT TO THE DISCRETION OF THE WELDER
3. GRIND SMOOTH ALL INDICATED WELDS

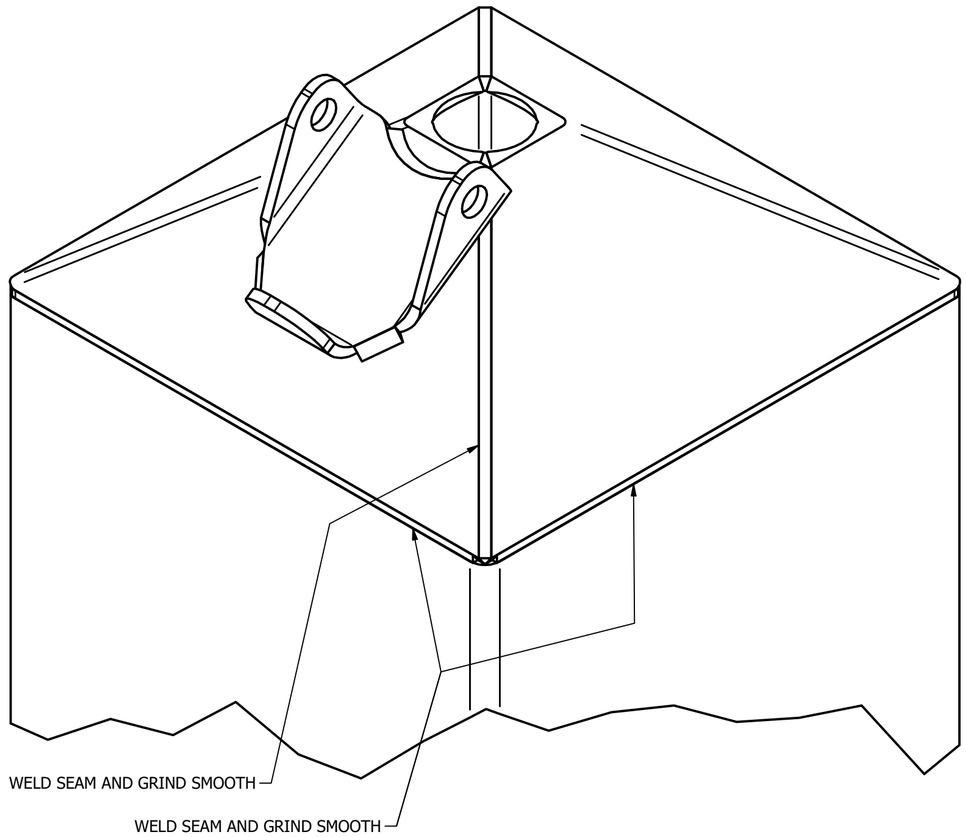

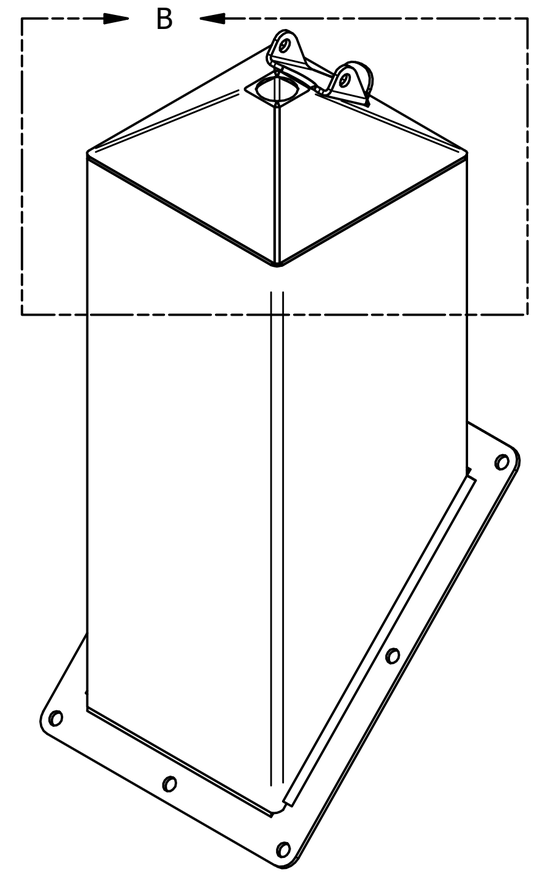

DETAIL B

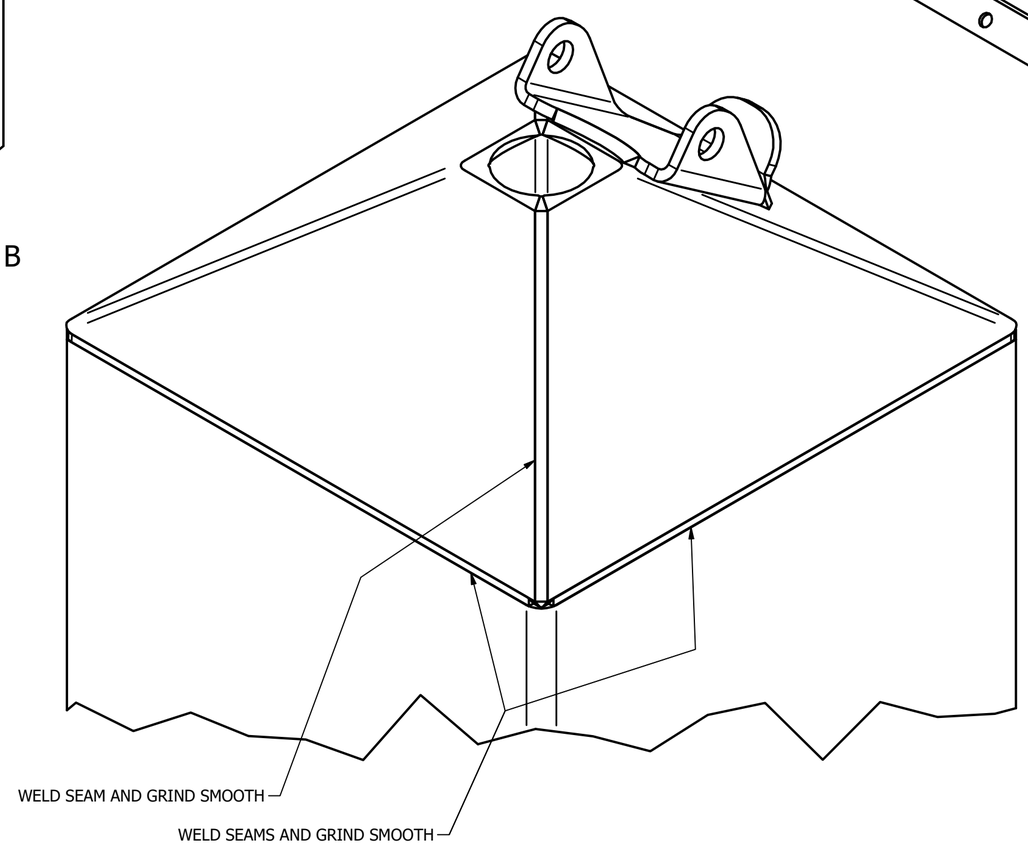

NOTICE:
INFORMATION CONTAINED IN THIS DOCUMENT OR ANY REPRODUCTION THEREOF, IS PROPRIETARY INFORMATION AND PROPERTY OF HOWARD HUGHES MEDICAL INSTITUTE. IT SHALL NOT BE DISCLOSED, COPIED, DUPLICATED OR USED FOR MANUFACTURE, PRODUCTION OR PROCUREMENT, WITHOUT THE EXPRESS WRITTEN PERMISSION OF HOWARD HUGHES MEDICAL INSTITUTE.

(UNLESS SPECIFIED OTHERWISE)
PRIMARY UNITS: INCHES
[SECONDARY UNITS]: MILLIMETERS

PRIMARY TOLERANCES:	
X.X	± 0.020
X.XX	± 0.010
X.XXX	± 0.005
X.XXXX	± 0.0005
ANGULAR	± 0.5 DEG

- DO NOT SCALE DRAWING -

THIRD ANGLE PROJECTION:

hhmi Howard Hughes Medical Institute
hhmi janelia Research Campus

RCBH4 WELDMENT.iam

SIZE	PART NUMBER	REV	SHEET
C	J008644	C	4 OF 10

WELDMENT NOTES:
1. JOINTS WILL NOT ENDURE SIGNIFICANT STRESS DURING USE. WELD DESIGNATION IS LEFT TO THE DISCRETION OF THE WELDER
2. SEAM WELD INDICATED JOINTS
3. GRINDING NOT NEEDED

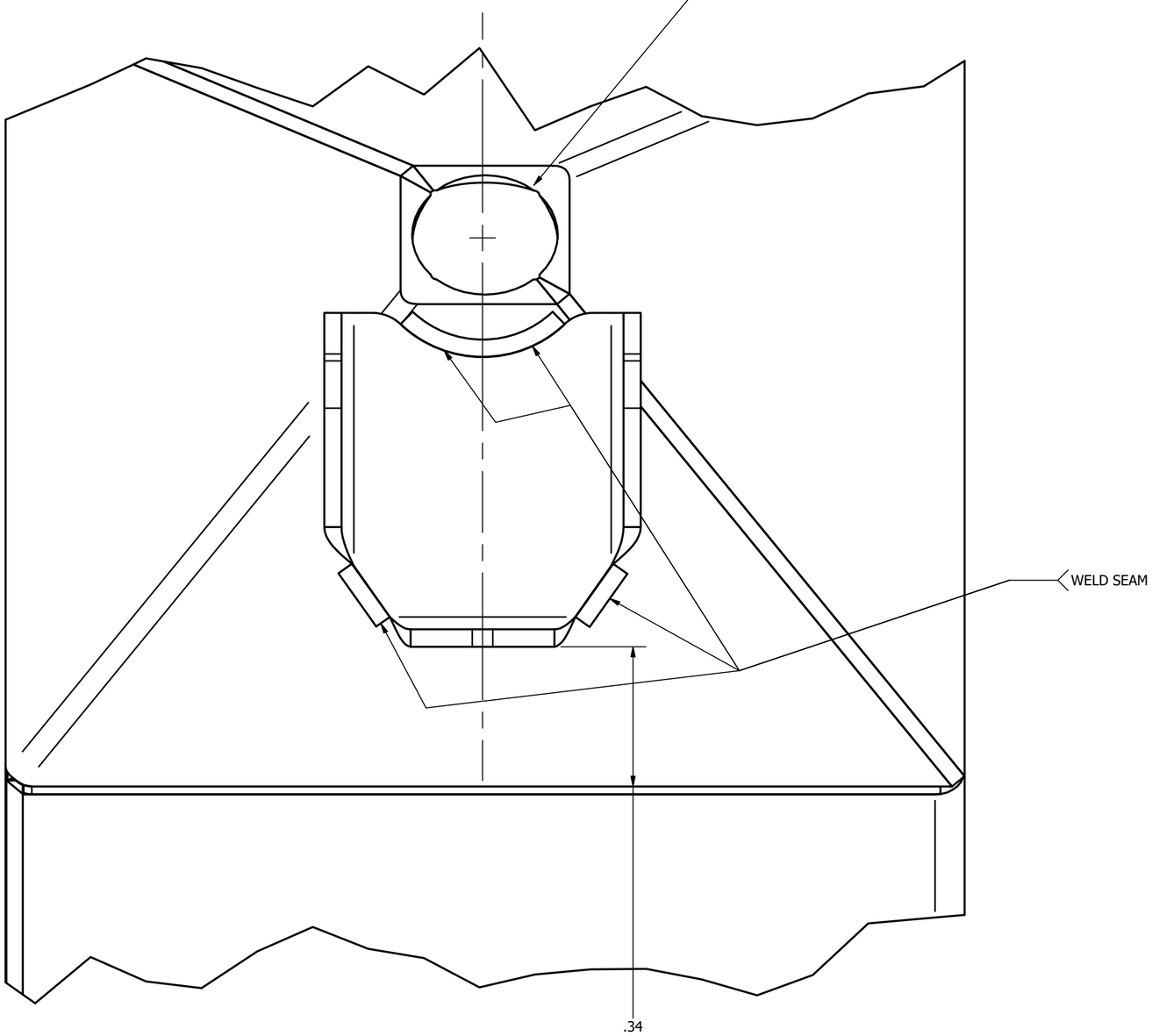

DETAIL C

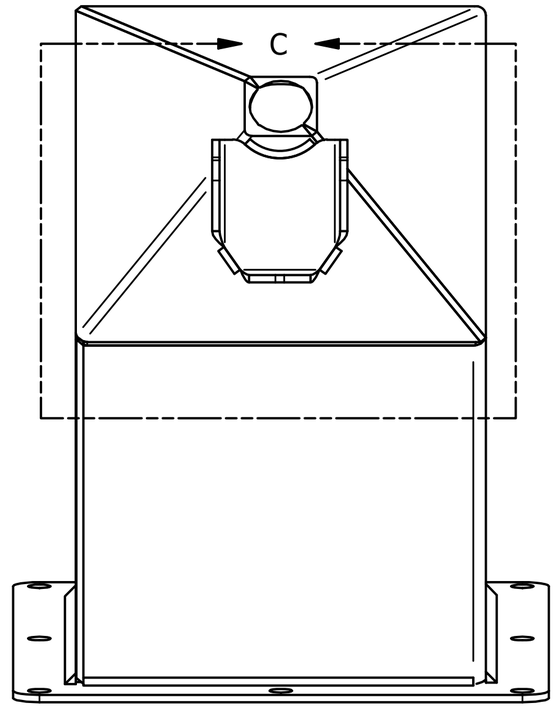

NOTICE:
INFORMATION CONTAINED IN THIS DOCUMENT OR ANY REPRODUCTION THEREOF, IS PROPRIETARY INFORMATION AND PROPERTY OF HOWARD HUGHES MEDICAL INSTITUTE. IT SHALL NOT BE DISCLOSED, COPIED, DUPLICATED OR USED FOR MANUFACTURE, PRODUCTION OR PROCUREMENT, WITHOUT THE EXPRESS WRITTEN PERMISSION OF HOWARD HUGHES MEDICAL INSTITUTE.

(UNLESS SPECIFIED OTHERWISE)
PRIMARY UNITS: INCHES
[SECONDARY UNITS]: MILLIMETERS

PRIMARY TOLERANCES:	
X.X	± 0.020
X.XX	± 0.010
X.XXX	± 0.005
X.XXXX	± 0.0005
ANGULAR	± 0.5 DEG

- DO NOT SCALE DRAWING -
THIRD ANGLE PROJECTION:

hhmi Howard Hughes Medical Institute
hhmi janelia Research Campus

RCBH4 WELDMENT.iam

SIZE	PART NUMBER	REV	SHEET
C	J008644	C	5 OF 10

GENERAL NOTES:
1. MATERIAL: **STAINLESS STEEL, 316**
2. SPECIAL FINISH: **N/A**
3. SURFACE ROUGHNESS (UNLESS SPECIFIED OTHERWISE): **N/A** (AVERAGE MICRO-INCHES)
4. INTERPRET DIMENSIONS AND TOLERANCES PER ASME Y14.5M-1994
5. DEBURR AND BREAK ALL SHARP EDGES, MAX 0.010" (UNLESS SPECIFIED OTHERWISE)
6. PARTS ARE TO BE CLEAN AND FREE OF OIL, GREASE, AND OTHER CONTAMINANTS
7. DIMENSIONS INCLUDE ANODIZING, ELECTROPLATING, AND CHEMICALLY APPLIED FINISHES IF APPLICABLE

SHEET METAL NOTES:
1. SHEET METAL THICKNESS: **0.042"**
2. ALL SHEET METAL RELIEFS SHALL BE NO GREATER THAN .03"X.03".
3. TYPICAL BEND RELIEFS ARE EQUAL TO THE THICKNESS OF MATERIAL.
4. ALL BENDS SHALL BE OF MINIMUM BEND RADII UNLESS OTHERWISE NOTED.
5. ALL DIMENSIONS TAKEN FROM PROJECTED CORNERS.
6. DRAWING SHOWS MOST DIMENSIONS, HOWEVER ACTUAL LOCATIONS AND DIMENSIONS SHALL BE CONTROLLED BY CREATING A FLAT PATTERN FROM THE SOLID MODEL.

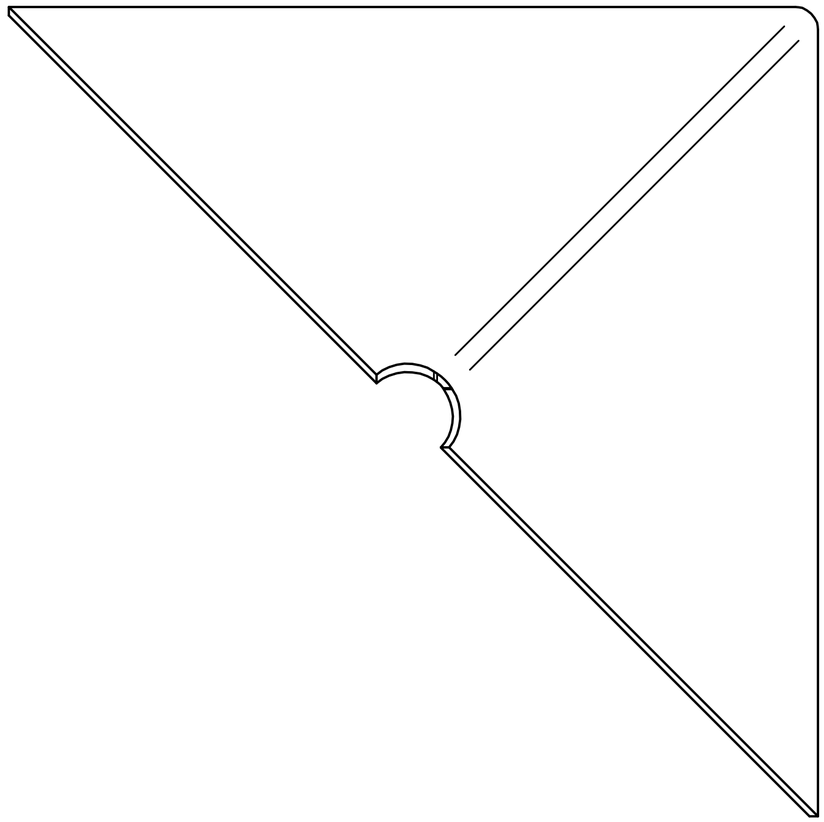

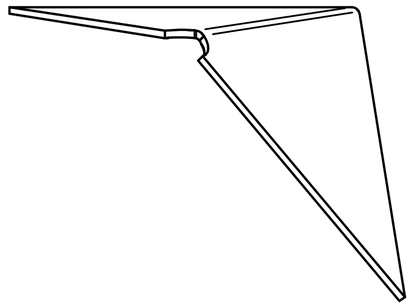

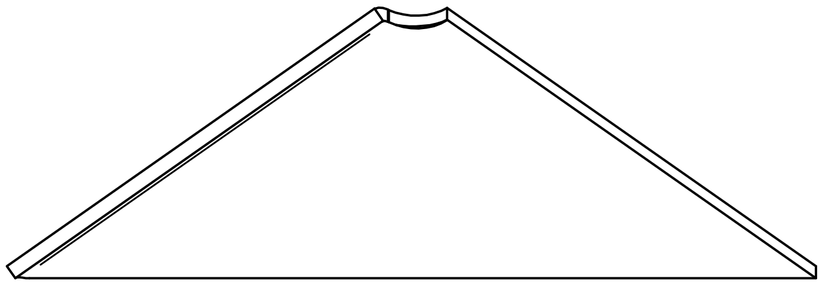

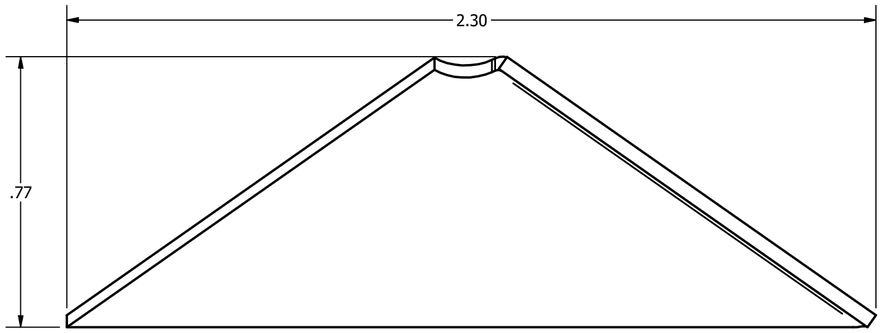

NOTICE:
INFORMATION CONTAINED IN THIS DOCUMENT OR ANY REPRODUCTION THEREOF, IS PROPRIETARY INFORMATION AND PROPERTY OF HOWARD HUGHES MEDICAL INSTITUTE. IT SHALL NOT BE DISCLOSED, COPIED, DUPLICATED OR USED FOR MANUFACTURE, PRODUCTION OR PROCUREMENT, WITHOUT THE EXPRESS WRITTEN PERMISSION OF HOWARD HUGHES MEDICAL INSTITUTE.

(UNLESS SPECIFIED OTHERWISE)
PRIMARY UNITS: INCHES
[SECONDARY UNITS]: MILLIMETERS

PRIMARY TOLERANCES:	
X.X	± 0.020
X.XX	± 0.010
X.XXX	± 0.005
X.XXXX	± 0.0005
ANGULAR	± 0.5 DEG

- DO NOT SCALE DRAWING -

THIRD ANGLE PROJECTION:

hhmi Howard Hughes Medical Institute
hhmi janelia Research Campus

RCBH4 CONE.ipt

SIZE	PART NUMBER	REV	SHEET
C	J008639	C	6 OF 10

GENERAL NOTES:
1. MATERIAL: **STAINLESS STEEL, 316**
2. SPECIAL FINISH: **N/A**
3. SURFACE ROUGHNESS (UNLESS SPECIFIED OTHERWISE): **N/A** (AVERAGE MICRO-INCHES)
4. INTERPRET DIMENSIONS AND TOLERANCES PER ASME Y14.5M-1994
5. DEBURR AND BREAK ALL SHARP EDGES, MAX 0.010" (UNLESS SPECIFIED OTHERWISE)
6. PARTS ARE TO BE CLEAN AND FREE OF OIL, GREASE, AND OTHER CONTAMINANTS
7. DIMENSIONS INCLUDE ANODIZING, ELECTROPLATING, AND CHEMICALLY APPLIED FINISHES IF APPLICABLE

SHEET METAL NOTES:
1. SHEET METAL THICKNESS: **0.042"**
2. ALL SHEET METAL RELIEFS SHALL BE NO GREATER THAN .03"X.03".
3. TYPICAL BEND RELIEFS ARE EQUAL TO THE THICKNESS OF MATERIAL.
4. ALL BENDS SHALL BE OF MINIMUM BEND RADII UNLESS OTHERWISE NOTED.
5. ALL DIMENSIONS TAKEN FROM PROJECTED CORNERS.
6. DRAWING SHOWS MOST DIMENSIONS, HOWEVER ACTUAL LOCATIONS AND DIMENSIONS SHALL BE CONTROLLED BY CREATING A FLAT PATTERN FROM THE SOLID MODEL.

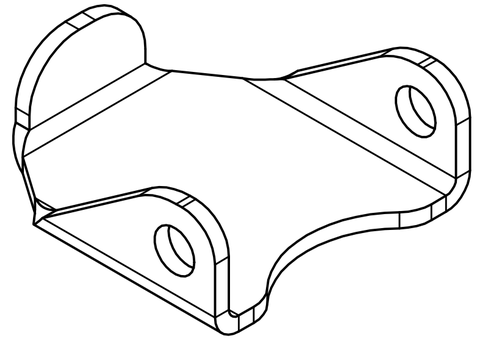

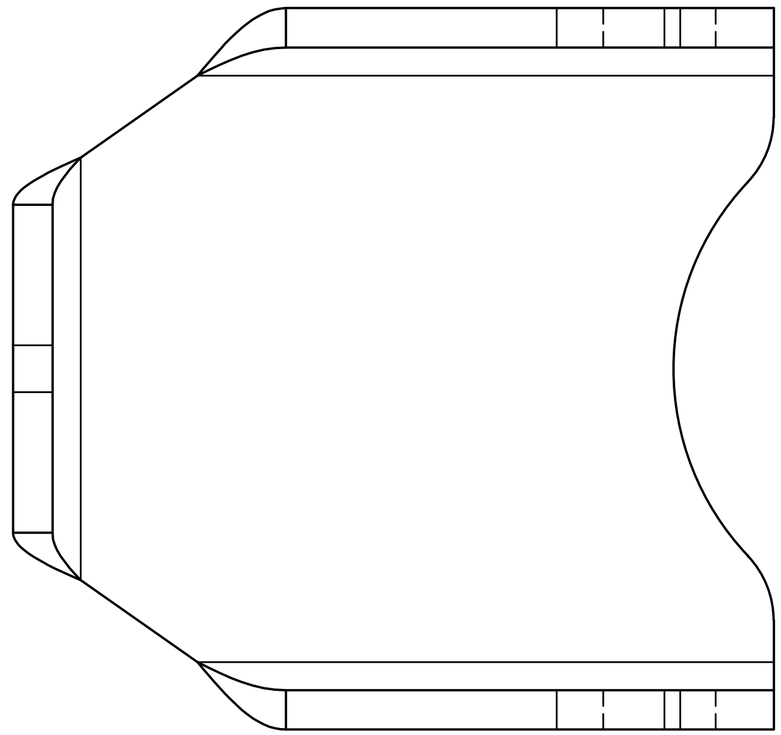

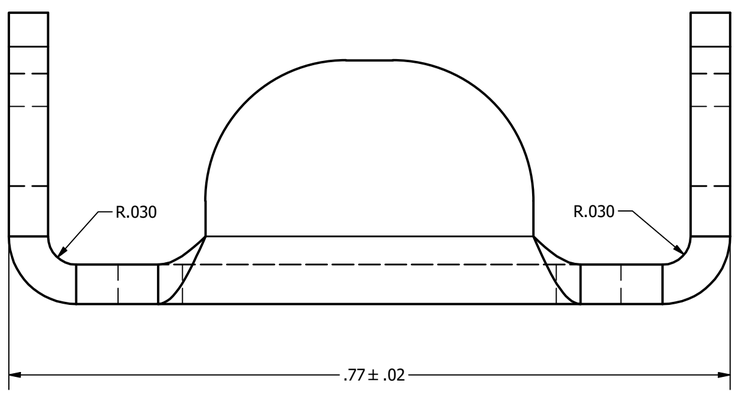

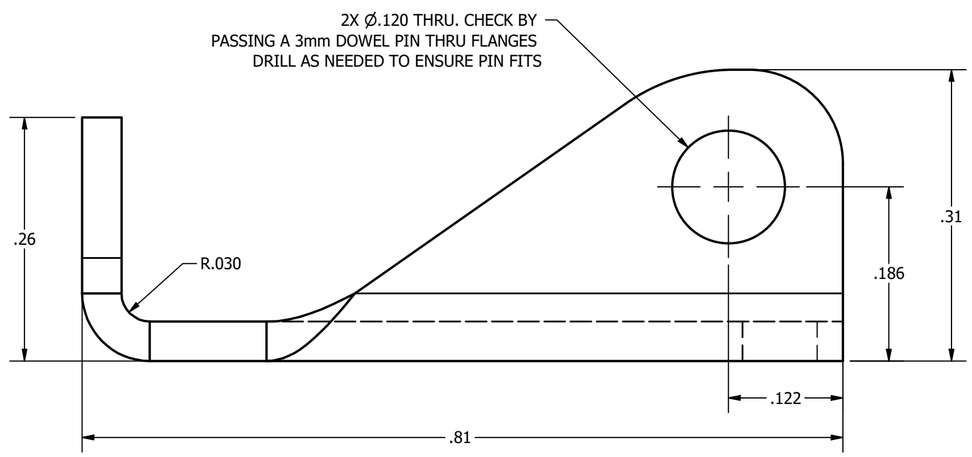

NOTICE:
INFORMATION CONTAINED IN THIS DOCUMENT OR ANY REPRODUCTION THEREOF, IS PROPRIETARY INFORMATION AND PROPERTY OF HOWARD HUGHES MEDICAL INSTITUTE. IT SHALL NOT BE DISCLOSED, COPIED, DUPLICATED OR USED FOR MANUFACTURE, PRODUCTION OR PROCUREMENT, WITHOUT THE EXPRESS WRITTEN PERMISSION OF HOWARD HUGHES MEDICAL INSTITUTE.

(UNLESS SPECIFIED OTHERWISE)
PRIMARY UNITS: INCHES
[SECONDARY UNITS]: MILLIMETERS

PRIMARY TOLERANCES:	
X.X	± 0.020
X.XX	± 0.010
X.XXX	± 0.005
X.XXXX	± 0.0005
ANGULAR	± 0.5 DEG

- DO NOT SCALE DRAWING -

THIRD ANGLE PROJECTION:

hhmi Howard Hughes Medical Institute

hhmi janelia Research Campus

RCBH4 FLAP HOLDER.ipt

SIZE	PART NUMBER	REV	SHEET
C	J008640	C	7 OF 10

GENERAL NOTES:
1. MATERIAL: **STAINLESS STEEL, 316**
2. SPECIAL FINISH: **N/A**
3. SURFACE ROUGHNESS (UNLESS SPECIFIED OTHERWISE): **N/A** (AVERAGE MICRO-INCHES)
4. INTERPRET DIMENSIONS AND TOLERANCES PER ASME Y14.5M-1994
5. DEBURR AND BREAK ALL SHARP EDGES, MAX 0.010" (UNLESS SPECIFIED OTHERWISE)
6. PARTS ARE TO BE CLEAN AND FREE OF OIL, GREASE, AND OTHER CONTAMINANTS
7. DIMENSIONS INCLUDE ANODIZING, ELECTROPLATING, AND CHEMICALLY APPLIED FINISHES IF APPLICABLE

SHEET METAL NOTES:
1. SHEET METAL THICKNESS: **0.042"**
2. ALL SHEET METAL RELIEFS SHALL BE NO GREATER THAN .03"X.03".
3. TYPICAL BEND RELIEFS ARE EQUAL TO THE THICKNESS OF MATERIAL.
4. ALL BENDS SHALL BE OF MINIMUM BEND RADII UNLESS OTHERWISE NOTED.
5. ALL DIMENSIONS TAKEN FROM PROJECTED CORNERS.
6. DRAWING SHOWS MOST DIMENSIONS, HOWEVER ACTUAL LOCATIONS AND DIMENSIONS SHALL BE CONTROLLED BY CREATING A FLAT PATTERN FROM THE SOLID MODEL.

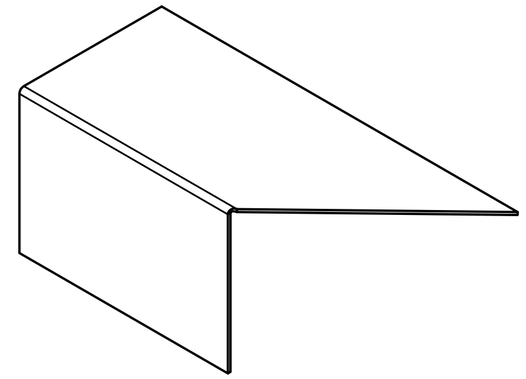

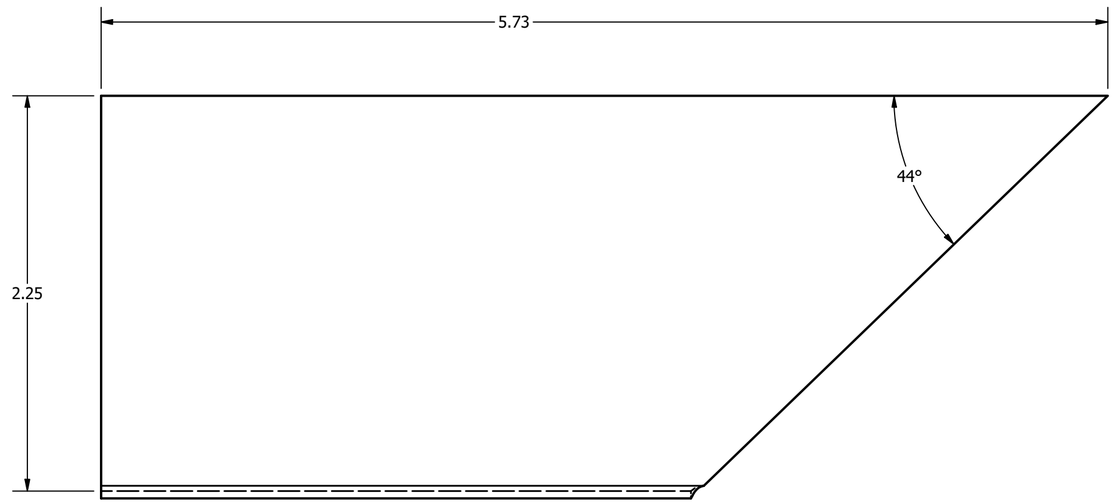

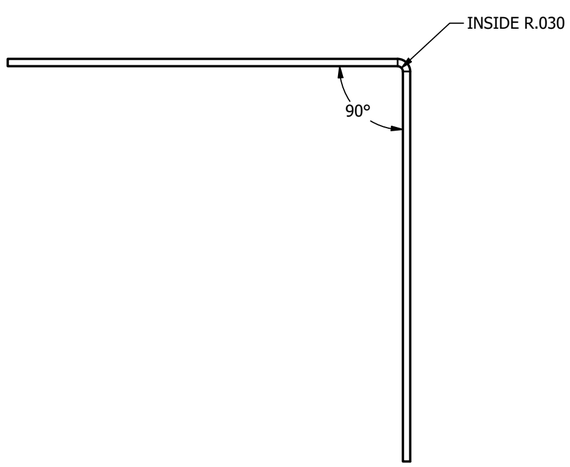

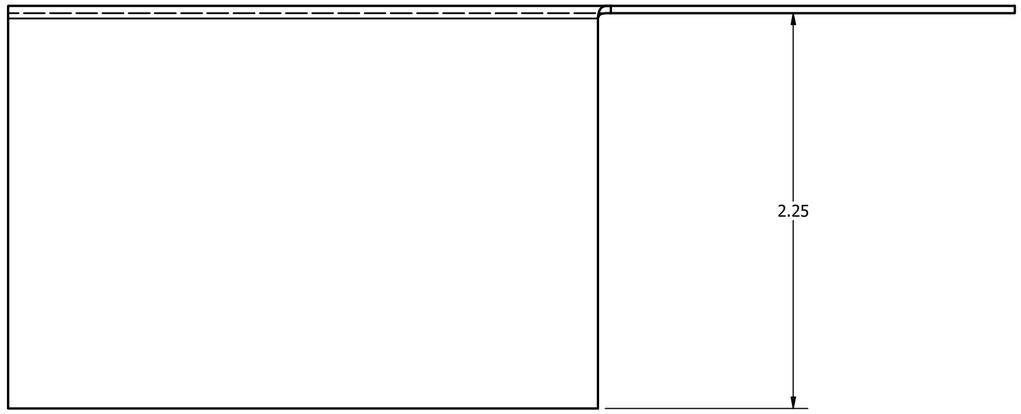

NOTICE:
INFORMATION CONTAINED IN THIS DOCUMENT OR ANY REPRODUCTION THEREOF, IS PROPRIETARY INFORMATION AND PROPERTY OF HOWARD HUGHES MEDICAL INSTITUTE. IT SHALL NOT BE DISCLOSED, COPIED, DUPLICATED OR USED FOR MANUFACTURE, PRODUCTION OR PROCUREMENT, WITHOUT THE EXPRESS WRITTEN PERMISSION OF HOWARD HUGHES MEDICAL INSTITUTE.

(UNLESS SPECIFIED OTHERWISE)
PRIMARY UNITS: INCHES
[SECONDARY UNITS]: MILLIMETERS

PRIMARY TOLERANCES:	
X.X	± 0.020
X.XX	± 0.010
X.XXX	± 0.005
X.XXXX	± 0.0005
ANGULAR	± 0.5 DEG

- DO NOT SCALE DRAWING -

THIRD ANGLE PROJECTION:

hhmi Howard Hughes Medical Institute

hhmi janelia Research Campus

RCBH4 WALLS A.ipt

SIZE	PART NUMBER	REV	SHEET
C	J008642	C	8 OF 10

GENERAL NOTES:
1. MATERIAL: **STAINLESS STEEL, 316**
2. SPECIAL FINISH: **N/A**
3. SURFACE ROUGHNESS (UNLESS SPECIFIED OTHERWISE): **N/A** (AVERAGE MICRO-INCHES)
4. INTERPRET DIMENSIONS AND TOLERANCES PER ASME Y14.5M-1994
5. DEBURR AND BREAK ALL SHARP EDGES, MAX 0.010" (UNLESS SPECIFIED OTHERWISE)
6. PARTS ARE TO BE CLEAN AND FREE OF OIL, GREASE, AND OTHER CONTAMINANTS
7. DIMENSIONS INCLUDE ANODIZING, ELECTROPLATING, AND CHEMICALLY APPLIED FINISHES IF APPLICABLE

SHEET METAL NOTES:
1. SHEET METAL THICKNESS: **0.042"**
2. ALL SHEET METAL RELIEFS SHALL BE NO GREATER THAN .03"X.03".
3. TYPICAL BEND RELIEFS ARE EQUAL TO THE THICKNESS OF MATERIAL.
4. ALL BENDS SHALL BE OF MINIMUM BEND RADII UNLESS OTHERWISE NOTED.
5. ALL DIMENSIONS TAKEN FROM PROJECTED CORNERS.
6. DRAWING SHOWS MOST DIMENSIONS, HOWEVER ACTUAL LOCATIONS AND DIMENSIONS SHALL BE CONTROLLED BY CREATING A FLAT PATTERN FROM THE SOLID MODEL.

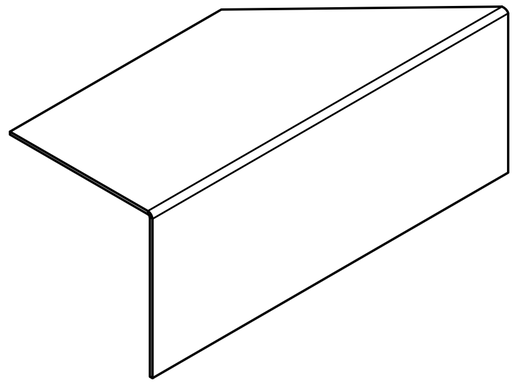

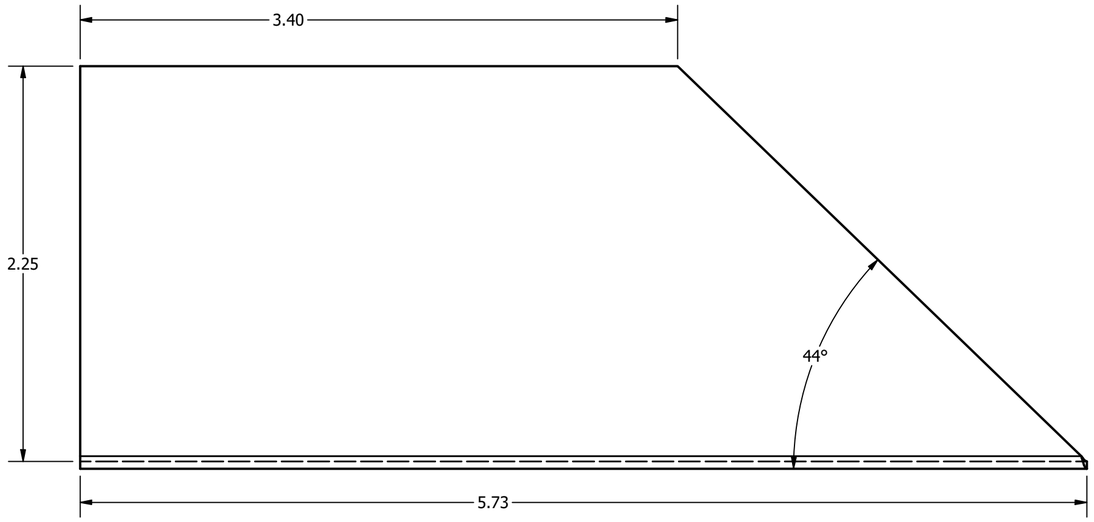

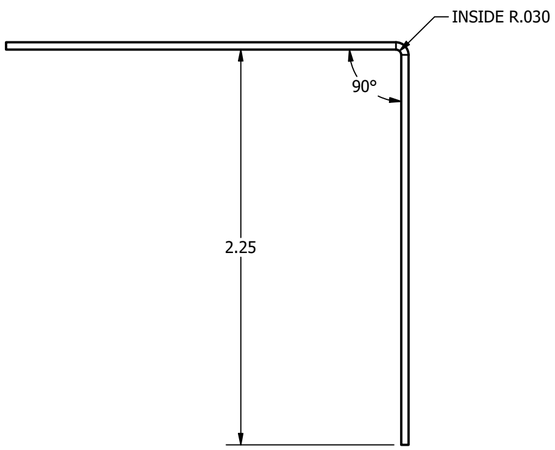

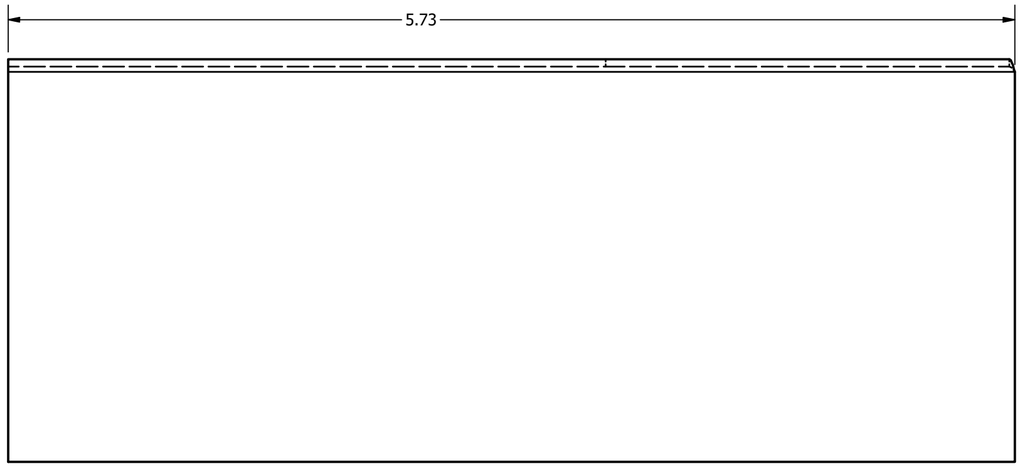

NOTICE:
INFORMATION CONTAINED IN THIS DOCUMENT OR ANY REPRODUCTION THEREOF, IS PROPRIETARY INFORMATION AND PROPERTY OF HOWARD HUGHES MEDICAL INSTITUTE. IT SHALL NOT BE DISCLOSED, COPIED, DUPLICATED OR USED FOR MANUFACTURE, PRODUCTION OR PROCUREMENT, WITHOUT THE EXPRESS WRITTEN PERMISSION OF HOWARD HUGHES MEDICAL INSTITUTE.

(UNLESS SPECIFIED OTHERWISE)
PRIMARY UNITS: INCHES
[SECONDARY UNITS]: MILLIMETERS

PRIMARY TOLERANCES:	
X.X	± 0.020
X.XX	± 0.010
X.XXX	± 0.005
X.XXXX	± 0.0005
ANGULAR	± 0.5 DEG

- DO NOT SCALE DRAWING -

THIRD ANGLE PROJECTION:

hhmi Howard Hughes Medical Institute

hhmi janelia Research Campus

RCBH4 WALLS B.ipt

SIZE	PART NUMBER	REV	SHEET
C	J008641	C	9 OF 10

GENERAL NOTES:
1. MATERIAL: **STAINLESS STEEL, 316**
2. SPECIAL FINISH: **N/A**
3. SURFACE ROUGHNESS (UNLESS SPECIFIED OTHERWISE): **N/A** (AVERAGE MICRO-INCHES)
4. INTERPRET DIMENSIONS AND TOLERANCES PER ASME Y14.5M-1994
5. DEBURR AND BREAK ALL SHARP EDGES, MAX 0.010" (UNLESS SPECIFIED OTHERWISE)
6. PARTS ARE TO BE CLEAN AND FREE OF OIL, GREASE, AND OTHER CONTAMINANTS
7. DIMENSIONS INCLUDE ANODIZING, ELECTROPLATING, AND CHEMICALLY APPLIED FINISHES IF APPLICABLE

SHEET METAL NOTES:
1. SHEET METAL THICKNESS: **0.042"**
2. ALL SHEET METAL RELIEFS SHALL BE NO GREATER THAN .03"X.03".
3. TYPICAL BEND RELIEFS ARE EQUAL TO THE THICKNESS OF MATERIAL.
4. ALL BENDS SHALL BE OF MINIMUM BEND RADII UNLESS OTHERWISE NOTED.
5. ALL DIMENSIONS TAKEN FROM PROJECTED CORNERS.
6. DRAWING SHOWS MOST DIMENSIONS, HOWEVER ACTUAL LOCATIONS AND DIMENSIONS SHALL BE CONTROLLED BY CREATING A FLAT PATTERN FROM THE SOLID MODEL.

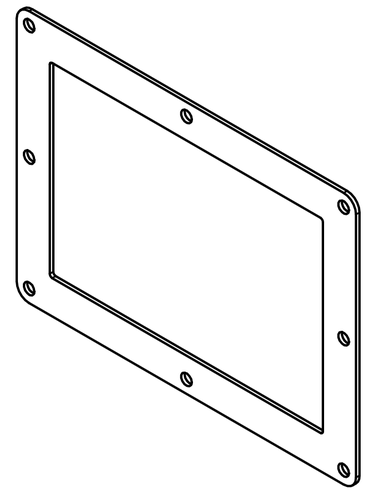

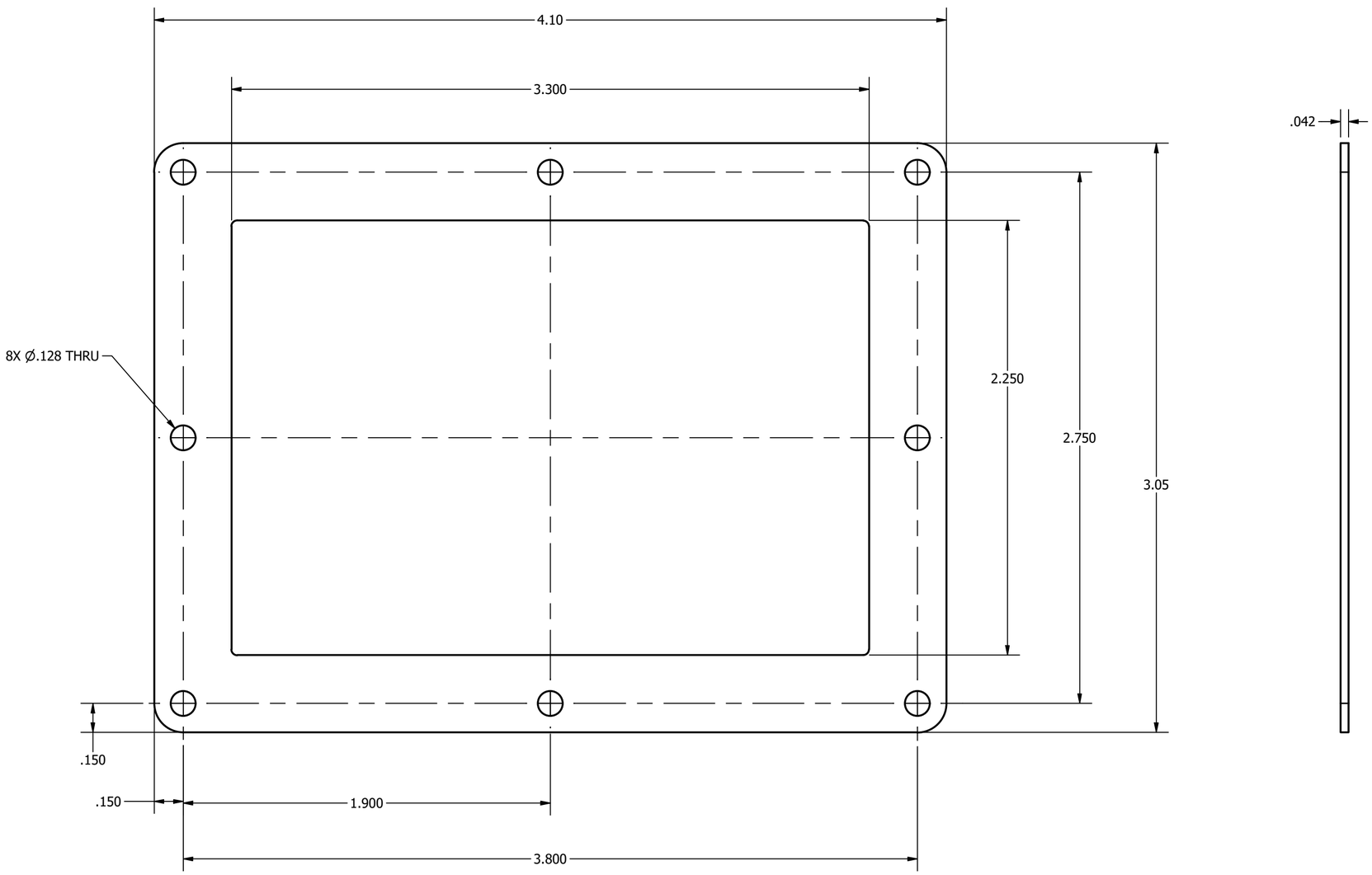

NOTICE:
INFORMATION CONTAINED IN THIS DOCUMENT OR ANY REPRODUCTION THEREOF, IS PROPRIETARY INFORMATION AND PROPERTY OF HOWARD HUGHES MEDICAL INSTITUTE. IT SHALL NOT BE DISCLOSED, COPIED, DUPLICATED OR USED FOR MANUFACTURE, PRODUCTION OR PROCUREMENT, WITHOUT THE EXPRESS WRITTEN PERMISSION OF HOWARD HUGHES MEDICAL INSTITUTE.

(UNLESS SPECIFIED OTHERWISE)
PRIMARY UNITS: INCHES
[SECONDARY UNITS]: MILLIMETERS

PRIMARY TOLERANCES:	
X.X	± 0.020
X.XX	± 0.010
X.XXX	± 0.005
X.XXXX	± 0.0005
ANGULAR	± 0.5 DEG

- DO NOT SCALE DRAWING -

THIRD ANGLE PROJECTION:

hhmi Howard Hughes Medical Institute
hhmi janelia Research Campus

RCBH4 MOUNT PLATE.ipt

SIZE	PART NUMBER	REV	SHEET
C	J008643	C	10 OF 10